BALL VALVES

For Commercial and Industrial Applications

Job Name _____ Contractor _____

Job Location _____ Approval _____

Engineer _____ Contractor's P.O. No. _____

Approval _____ Representative _____

LEAD FREE*

Series LFFBV-3C, LFFBVS-3C

2-Piece, Full Port, Lead Free* Brass Ball Valves

Sizes: ¼" – 4" (8 – 100mm)

Series LFFBV-3C 2-piece, full port, Lead Free* ball valves are used in commercial and industrial applications for a full range of liquids and gases. They feature a bottom-loaded blowout proof stem, virgin PTFE seats, thrust washer, and adjustable stem packing gland, stem packing nut, chrome plated Lead Free* brass ball, copper silicon alloy brass adapter, and steel handle. The Series LFFBV-3C, LFFBVS-3C features Lead Free* construction to comply with Lead Free* installation requirements.

Features

- Lead Free* forged copper silicon alloy body and adapter
- Certified to NSF/ANSI standard 61/8
- CSA approved threaded valves only ¼" – 3" (15 – 80mm)
- UL/FM approved threaded valves ½" – 2" (15 – 50mm)
- UL Listed solder valves ½" – 2" (15 – 50mm)
- Fluorocarbon elastomer stem O-ring prevents stem leaks
- Adjustable stem packing gland
- PTFE stem packing seal, thrust washer, and seats
- Bottom loaded blowout proof stem
- Machined chrome plated Lead Free* brass ball
- Valves comply to MSS-SP-110 standard

Models

LFFBV-3C: ¼" – 4" (8 – 100mm) with threaded connections

LFFBVS-3C: ½" – 3" (15 – 80mm) with solder connections

Pressure – Temperature

Temperature Range: -40ºF to 400ºF (-40ºC to 204ºC)

Pressure Ratings

LFFBV-3C : ¼" – 2" (8 – 50mm)
600psi (41 bar) WOG, non-shock
150psi (10.3 bar) WSP

2½" – 4" (65 – 100mm)
400psi (27.5 bar) WOG, non-shock
125psi (8.6 bar) WSP

LFFBVS-3C : ½" – 2" (15 – 50mm)
600psi (41 bar) WOG, non-shock
150psi (10.3 bar) WSP

2½" – 3" (65 – 80mm)
400psi (27.5 bar) WOG, non-shock
125psi (8.6 bar) WSP

NOTICE

Apply heat with the flame directed AWAY from the center of the valve body. Excessive heat can harm the seats. After soldering, the packing nut may have to be tightened.

Approvals

¼" – 4" (8 - 100mm) LFFBV-3C
Certified to NSF/ANSI standard 61/8

½" – 3" (15 – 80mm) LFFBVS-3C
Certified to NSF/ANSI standard 61/8
*Domestic cold water at 73ºF (23ºC)

½" – 2" (15 – 50mm) LFFBV-3C UL/FM approved

½" – 2" (15 – 50mm) LFFBVS-3C UL Listed

Gas Approvals (Threaded Valves Only)

½" – 2" (15 – 50mm) ASME B16.33, CSA
ASME B16.44

½ psig, 5psig, and 125psig (14, 34 and 862 kPa)
@ -40ºF to 125ºF (-40ºC to 52ºC)

2½" – 3" (65 – 80mm)
ASME B16.38, CSA,
ASME B16.44

½ psig, 5psig, and 125psig (14, 34 and 862 kPa)
@ -40ºF to 125ºF (-40ºC to 52ºC)

Specifications

Approved valves shall be 2-piece full port design constructed using Lead Free* forged copper silicon alloy brass body and end adapter. Lead Free* 2-Piece, Full Port, Ball Valves shall be constructed using Lead Free* materials. Lead Free* valves shall comply with state codes and standards, where applicable, requiring reduced lead content. Seats and stem packing shall be virgin PTFE. Stem shall be bottom loaded, blowout proof design with fluorocarbon elastomer O-ring to prevent stem leaks. Valve shall have chrome plated Lead Free* brass ball and adjustable packing gland. Threaded valves ½" – 3" shall be CSA approved to ½, 5, and 125psig (14, 34 and 862 kPa), UL/FM approved and certified to NSF/ANSI standard 61/8. Solder valves to be UL listed and certified to NSF/ANSI standard 61/8. Valve sizes ¼" – 2" shall be rated to 600psi (41 bar) WOG non-shock and 150psi (10.3 bar) WSP. Valve sizes 2½" – 4" threaded, shall be rated to 400psi (27.5 bar) WOG non-shock and 125psi (8.6 bar) WSP. Valve sizes 2½" – 3" solder shall be rated to 400psi (27.5 bar) WOG non-shock and 125psi (8.6 bar) WSP. Valve shall be a Watts Series LFFBV-3C (threaded) or LFFBVS-3C (solder).

***The wetted surface of this product contacted by consumable water contains less than 0.25% of lead by weight.**

****This valve is designed to be soft soldered into lines without disassembly, using a low temperature solder to 420°F (216°C). Higher temperature solders may damage the seat material.**

Watts product specifications in U.S. customary units and metric are approximate and are provided for reference only. For precise measurements, please contact Watts Technical Service. Watts reserves the right to change or modify product design, construction, specifications, or materials without prior notice and without incurring any obligation to make such changes and modifications on Watts products previously or subsequently sold.

WATTS®

BALL VALVES

Materials

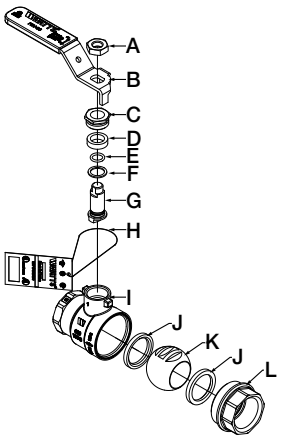

A.	**Handle Nut**	Zinc plated carbon steel
B.	**Handle Assembly**	Zinc plated carbon steel with vinyl insulator
C.	**Packing Nut**	Brass
D.	**Stem Packing**	Virgin PTFE
E.	**O-ring**	Fluorocarbon elastomer (FKM)
F.	**Thrust Washer**	Virgin PTFE
G.	**Stem**	Brass
H.	**Tag**	Cardboard, Mylar coated both sides
I.	**Body**	Forged Lead Free* copper silicon alloy
J.	**Seats**	Virgin PTFE
K.	**Ball**	Chrome plated Lead Free* brass
L.	**Adapter**	Forged Lead Free* copper silicon alloy brass

Temperature – Pressure

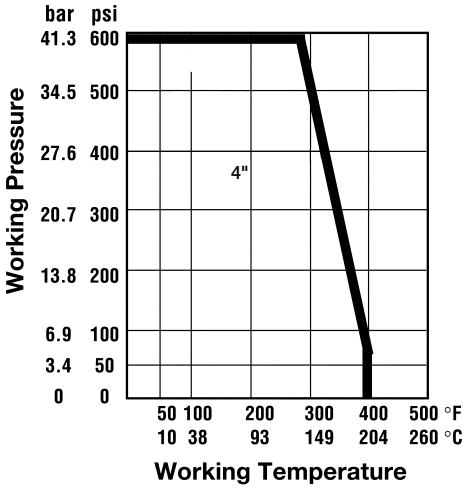

***See applicable note on reverse side for solder end valves with regards to pressure/ temperature rating.**

Options

SS	Stainless steel ball and stem
TH	Tee handle
QC	Quick connect
CC	Cap and chain

Dimensions – Weights

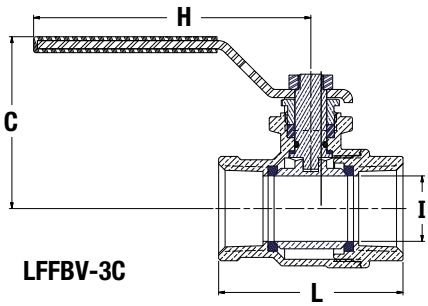

LFFBV-3C

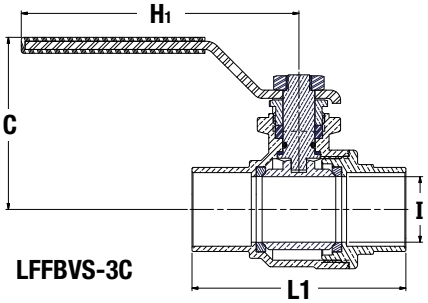

LFFBVS-3C

SIZE (DN)		DIMENSIONS												WEIGHT	
		C		H		H1		I		L		L1			
in.	mm	in.	mm	in.	mm	in.	mm	in.	mm	in.	mm	in.	mm	lbs.	kg.
¼	8	1 13/16	46	3 7/16	87	-	-	½	12.9	1¾	45	-	-	0.4	0.2
⅜	10	1 13/16	46	3 7/16	87	-	-	½	12.9	1¾	45	-	-	0.4	0.2
½	15	1 13/16	46	3 7/16	87	3 7/16	87	½	12.9	1 15/16	50	2 1/16	52	0.4	0.2
¾	20	2¼	57	4	101	4	101	¾	19.2	2 5/16	59	2 11/16	68	0.8	0.3
1	25	2⅝	67	4¼	108	4¼	108	1	25.5	2 13/16	72	3¼	83	1.2	0.5
1¼	32	2 13/16	71	4¼	108	4¼	108	1¼	31.9	3 3/16	81	3 11/16	94	1.8	0.8
1½	40	3 3/16	80	5¼	134	5 5/16	135	1¼	38.0	3½	88	4¼	108	2.6	1.2
2	50	3½	89	6	153	6	153	2	50.9	4⅛	105	5 5/16	135	3.7	1.7
2½	65	4 1/16	104	7⅜	187	7⅜	188	2½	63.6	5 5/16	134	6¼	158	7.1	3.2
3	80	4½	114	7¾	197	7¾	197	3	76.3	6 1/16	154	7⅜	185	11.3	4.7
4	100	5⅜	136	9⅝	245	-	-	4	101.6	7 7/16	189	-	-	17.7	8.0

WATTS®

A Watts Water Technologies Company

USA: Tel: (978) 688-1811 • Fax: (978) 794-1848 • www.watts.com
Canada: Tel: (905) 332-4090 • Fax: (905) 332-7068 • www.watts.ca

U.S. GREEN BUILDING COUNCIL MEMBER

ISO 9001-2008 CERTIFIED

© 2014 Watts